OA-4500

Activation et sécurité pour les installations en hauteur

The Optex OA-4500 is the new active infrared door sensor standard for use on industrial doors up to a mounting height of 4,5 meter. The OA-4500 is developed as a combination sensor for safety and activation, the active infrared presence detection protects against early closing of the door while the activation area activates the door when entering the detection area. This sensor meets market requirements in a variety of industrial door applications.

COMBINATION

The Optex OA-4500 is based on active infrared technique, combining activation and safety into one sensor. By using the unique Optex presence detection technique the OA-Axis series provides maximum safety around the threshold of an industrial door and offers, at the same time, a large motion detection area for door activation.

SAFETY

The active infrared presence detection of the OA-4500 can be set very accurately and can be moved 6° towards or away from the door. The sensor detects a person or object and holds the door open as long as they are in or near the threshold area, even if they stop or pause.

MOTION DETECTION

The large detection area provides fast detection for any traffic, including trucks, approaching from any angle. The sensor's enhanced pattern depth enables it to detect people and objects farther away and allows the door to open conveniently for them. The presence and motion detection area's can be adjusted independently.

EASY ADJUSTMENT

Installation time can be reduced to a minimum by using easily set switches and trimmers, therefore the sensor can be quickly adjusted for many different applications. To adjust the presence detection area the use of an Optex Infrared finder is recommended.

QUALITY

Optex automatic door sensors guarantee premium performance and include a 3-year full replacement warranty.

OPTEX B.V.
P.O.Box 24009
2490 AA The Hague
the Netherlands

T +31 70 419 41 00

info@optex.nl
www.optex.nl

LOOKING FOR THE MANUAL? IT'S AVAILABLE ON WWW.OPTEX.NL

NOT SURE THIS IS THE PRODUCT YOU NEED? TRY WWW.OPTEX.NL!

OA-4500

SPECIFICATIONS

Model	OA-4500
Colour	Black / silver
Mounting height	2.0 m – 4.5 m
Detection area	See detection area
Detection method	Active infrared reflection method (alle presence detection)
Depth adjustment	4th and 5th rows: + 26º to +44º 1st to 3rd rows: - 6º to +6º
Power supply	12 – 24V AC/DC
Power consumption	
Operation indicator	Green /stand-by Red / 1st row detection Orange / 2nd to 5th rows detection
Output	1st & 2nd rows N.C./N.O. selectable 50V0.3A max. (resistance reload) 3rd to 5th rows N.C./N.O. selectable 50V0.3A max. (resistance reload)
Relay hold time	Approx. 0.5 sec.
Operating temperature	-20ºC – +55ºC
Weight	320 g
Accessories	• 1 operation manual • 2 mounting screws • 1 mounting template • 1 area adjustment tool • 1 cable 4 m

DETECTION AREA

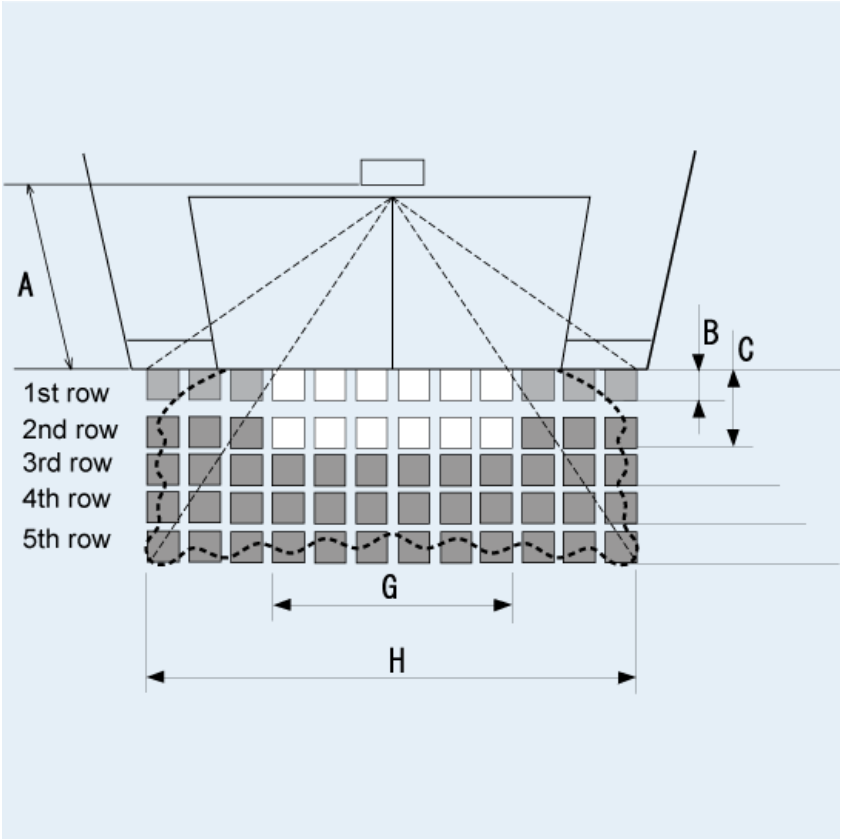

Mounting height A	2.50	3.00	3.50	4.00
Area Depth B	0.14	0.16	0.20	0.23
Area Depth C	0.42	0.48	0.58	0.67
Area Depth D	0.82	0.93	1.10	1.30
Area Depth E	1.35	1.54	1.85	2.16
Area Depth F	1.90	2.17	2.60	3.03
Area Width G	1.33	1.51	1.81	2.11
Area Width H	2.05	2.32	2.79	3.26
Area Width I	2.78	3.15	3.79	4.42